## Transmission Media

**Figure 7.1** *Transmission medium and physical layer*

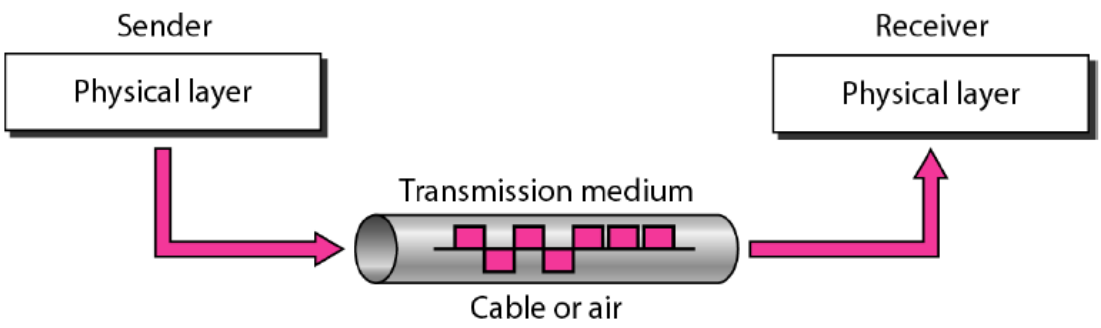


**Figure 7.2** *Classes of transmission media*

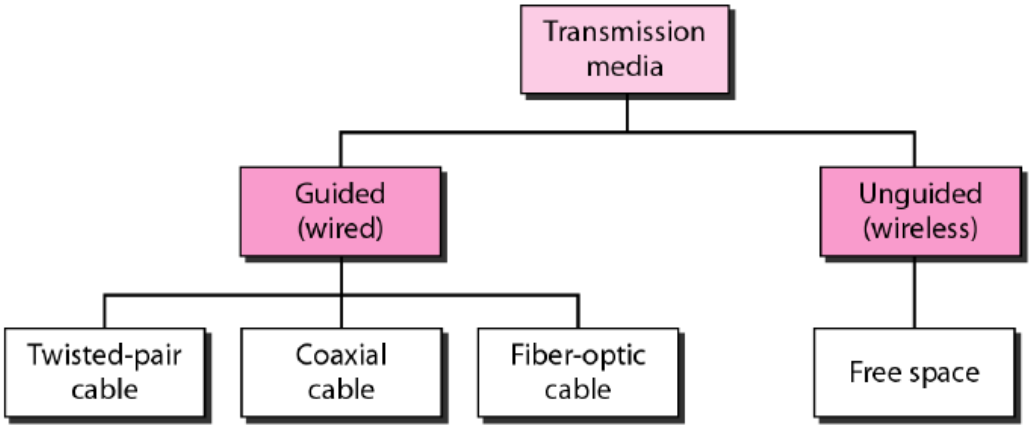

# 7-1 GUIDED MEDIA

***Guided media, which are those that provide a conduit from one device to another, include twisted-pair cable, coaxial cable, and fiber-optic cable.***

***Topics discussed in this section:***

**Twisted-Pair Cable**
**Coaxial Cable**
**Fiber-Optic Cable**

**Figure 7.3** *Twisted-pair cable*

**Figure 7.7** *Coaxial cable*

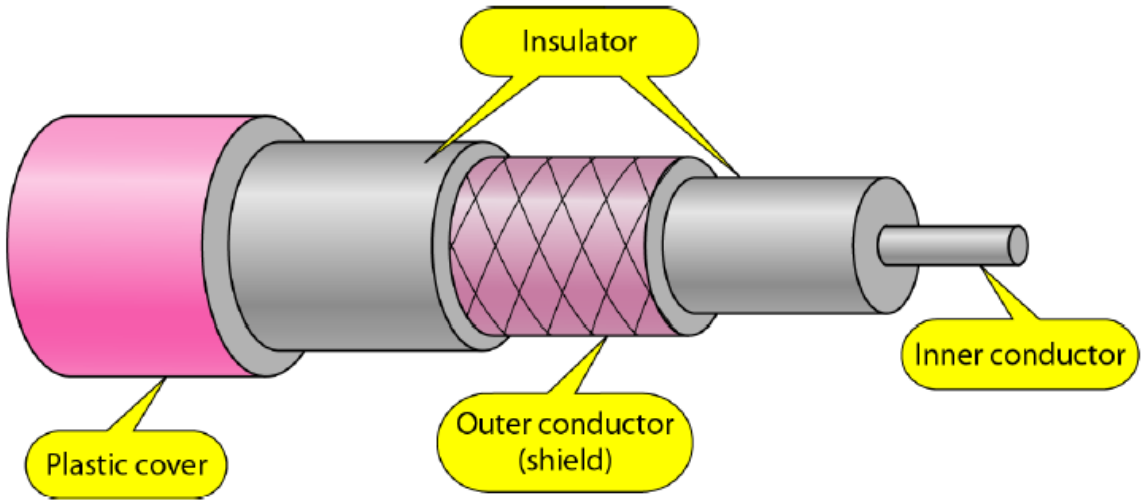

## Figure 7.11 *Optical fiber*

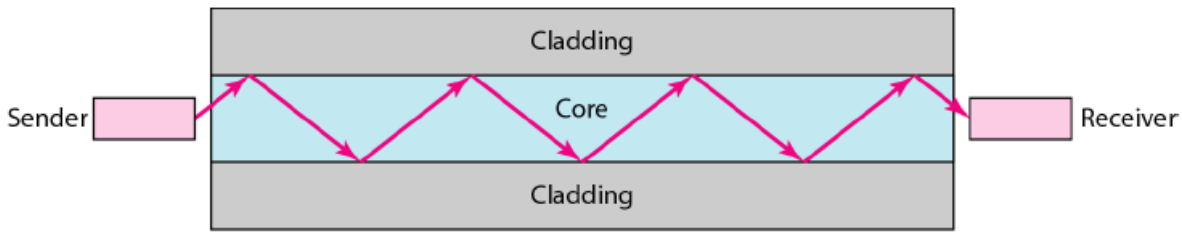


## Figure 7.14 *Fiber construction*

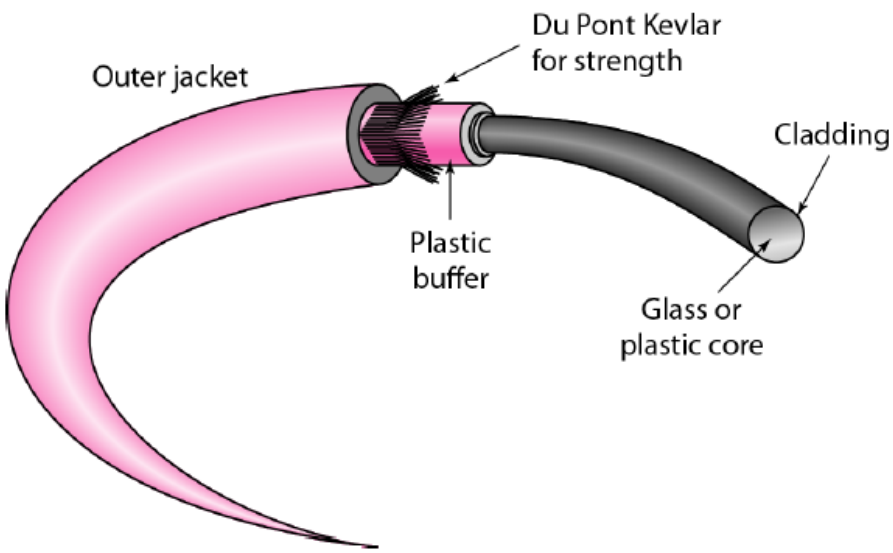

## 7-2 UN

*Unguide*
*without*
*commun*
*commun*

*Topics dis*

**Radio Wav**
**Microwave**
**Infrared**

# Unguided Media

Wireless transmission waves

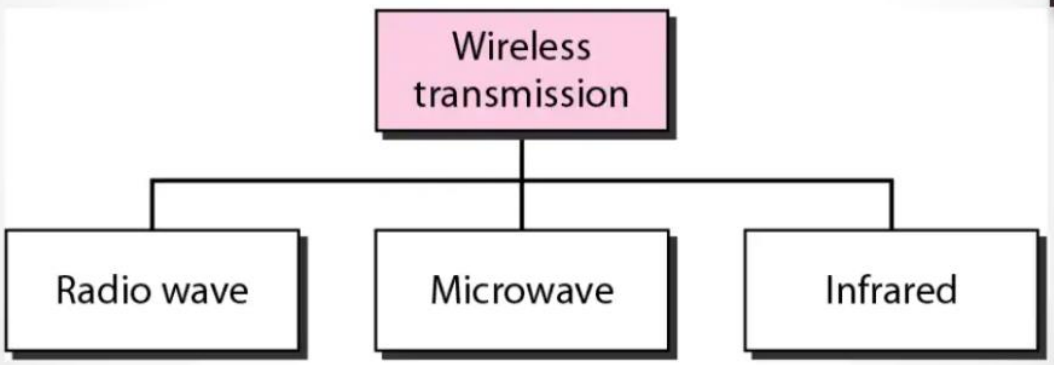

# Unguided Media – Radio Waves

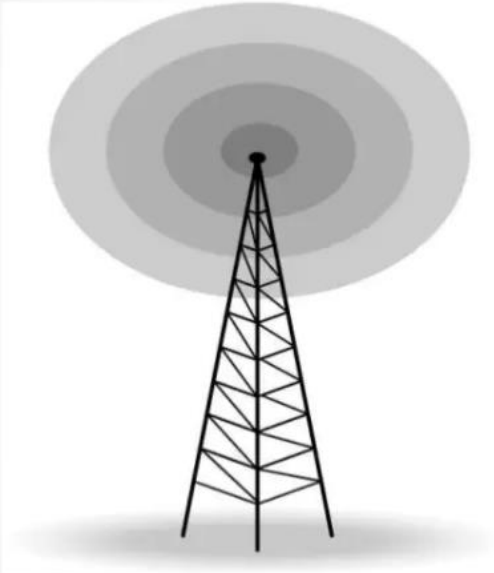

- Omnidirectional Antenna
- Frequencies between 3 KHz and 1 GHz.
- Used for multicasts(multiple way) communications, such as radio and television, and paging system.
- Radio waves can penetrate buildings easily, so that widely use for indoors & outdoors communication.

# Antennas

An Antenna is a structure that is generally a metallic object may be a wire or group of wires, used to convert high frequency current into electromagnetic waves.

Antenna are two types:

- **Transmission antenna**
  - Transmit radio frequency from transmitter
  - Radio frequency then
    Convert to electromagnetic energy by antenna
  - Then, radiate into surrounding environment

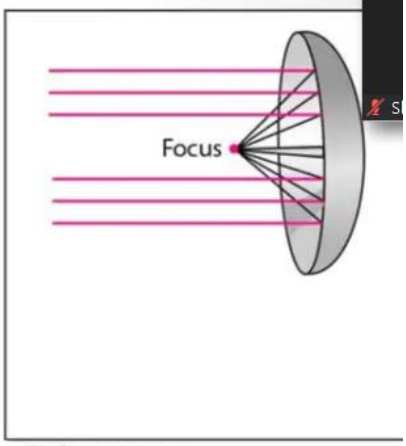

Dish antenna

- **Reception antenna**
  - Electromagnetic energy get in antenna
  - Then Antenna convert radio frequency to electrical energy
  - Then, Goes to receiver

same antenna can be used for both purposes

# Microwaves

Microwaves are ideal when large areas need to be covered and there are no obstacles in the path

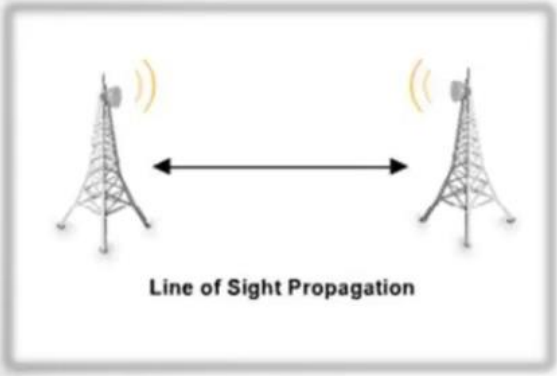


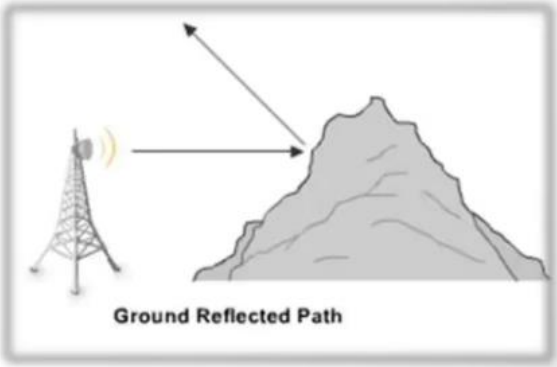

# Micro waves Transmission

- Microwaves are unidirectional
- Micro waves electromagnetic waves having frequency between 1 GHZ and 300 GHZ.
- There are two types of micro waves data communication system : terrestrial and satellite
- Micro waves are widely used for one to one communication between sender and receiver,
  example: cellular phone, satellite networks and in wireless LANs(wifi), WiMAX,GPS

# Infrared
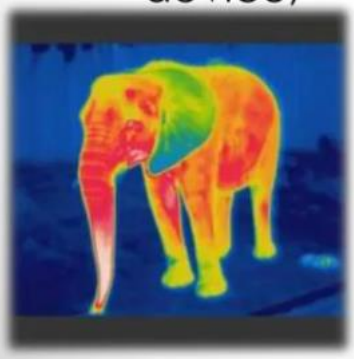
- Frequencies between 300 GHz to 400 THz.
- Used for short-range communication
- Example: Night Vision Camera,Remote control, File sharing between two phones, Communication between a PC and peripheral device,